PRODUCT DATA SHEET

PDS-537
Rev 07/11

# SOPREMA VEGETATIVE MAT CFB

VEGETATIVE MAT CFB

Order No. *

## DESCRIPTION & APPLICATION

Soprema Vegetative Mat is a textile based vegetative mat of light weight fleece sewn to PA/PP entanglements bound to coconut fiber blanket, filled with a planting substrate, and pre-cultivated with an even layer of low-profile, drought-tolerant vegetation.

The Soprema Vegetative mat CFB is intended for use with mild sloping applications.

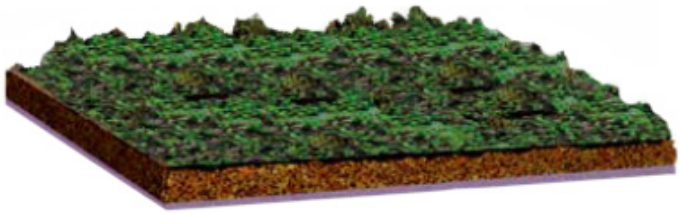

| PHYSICAL PROPERTIES | |
|---|---|
| PROPERTIES | Vegetative Mat |
| Mat Type | Coconut Fiber Mat |
| Size | 4-feet wide x 6-feet long |

| SEDUM SPECIES | |
|---|---|
| **USDA ZONE** | **SPECIES** |
| 4-8 | Sedum Album Coral Carpet - On Every Mat |
| 4-9 | Sedum Acre Gold Moss - On Every Mat |
| 3-8 | Sedum Sexangulare - On Every Mat |
| 4-9 | Sedum Reflexum Blue Spruce - On Every Mat |
| 3-9 | Sedum x Immergrunchen - On Selected Mats |
| 3-9 | Sedum Floriferum Weihenstephaner Gold - On Selected Mats |
| 4-9 | Sedum Kamtschaticum - On Selected Mats |
| 6-9 | Sedum Rupestre Angelina - On Every Mat |
| 4-9 | Sedum Spurium Tricolor - On Selected Mats |
| 3-8 | Sedum Spurium John Creech - On Every Mat* |
| 5-9 | Sedum Hispanicum Purple Form - On Selected Mats |
| 5-9 | Sedum Divergens - On Selected Mats |
| 3-9 | Sedum Spurium Red Carpet and/or Fludaglut - On Every Mat* |

*Light Shade Tolerant

## WARRANTY

Contact your local SOPREMA representative for project warranty offerings.

310 QUADRAL DRIVE • WADSWORTH, OHIO 44281 • TEL.: (330) 334-0066 • TOLL FREE: (800) 356-3521 • FAX: (330) 334-4289

General product information is provided on this Product Data Sheet. The physical property values reported here are based on testing conducted under controlled laboratory conditions according to accepted test standards.

PRODUCT DATA SHEET

PDS-538
Rev 06/11

# SOPREMA INSPECTION CHAMBER

INSPECTION CHAMBER (11″ x 11″ x 4.75″) Order No. *
INSPECTION CHAMBER (18″ x 18″ x 4.75″) Order No. *

## DESCRIPTION & APPLICATION

The Soprema Inspection Chamber is designed to fit over most standard roof drains. It is designed to keep away large debris and contaminants and to promote proper drainage through the entire green roof system profile.

The Soprema Inspection chamber is available in two (2) sizes in order to accommodate larger drains or alternative drain fields. For green roof assemblies requiring a deeper inspection chamber, extensions are available.

Custom chambers are available for overflow and intensive roof installations.

*Can be installed with ballast or unballasted surround.

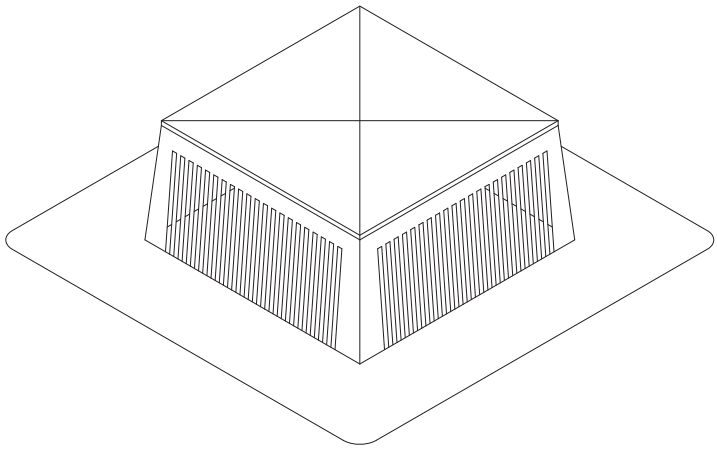

**Materials** - 304 BB 18 gauge stainless steel

**Slot Dimensions** - 3/16-inch (width) x 3-15/16” (height)

| Dimensions | | | | |
|---|---|---|---|---|
| Components | Lid Size | Chamber Size | Flange Size | Extensions |
| Standard Chamber | 11” x 11” x 5/8” | 11” x 11” x 4 3/4” | 17” x 17” | 1”, 3”, and 8 1/2” |
| Large Chamber | 18” x 18” x 5/8” | 18” x 18” x 4 3/4” | 27” x 27” | 1”, 3”, and 8 1/2” |

| Inspection Chamber Flow Rates | | | | | | | |
|---|---|---|---|---|---|---|---|
| Chamber Volume | | Time for Inspection Chamber to Empty | | | | Flow Rate | |
| $Ft^3$ | Gallon | Trial 1, Sec. | Trial 2, Sec. | Trial 3, Sec. | Avg., Sec | $Ft^3$/Min | Gal./Min |
| 0.93 | 7.04 | 4.68 | 3.6 | 3.24 | 3.84 | 14.68 | 110 |

## WARRANTY

Contact your local SOPREMA representative for project warranty offerings.

310 QUADRAL DRIVE • WADSWORTH, OHIO 44281 • TEL.: (330) 334-0066 • TOLL FREE: (800) 356-3521 • FAX: (330) 334-4289

General product information is provided on this Product Data Sheet. The physical property values reported here are based on testing conducted under controlled laboratory conditions according to accepted test standards.

PRODUCT DATA SHEET

PDS-539
Rev 06/11

# SOPREMA INSPECTION CHAMBER EXTENSION

## DESCRIPTION & INSTALLATION

The Soprema Inspection Chamber Extensions are designed are manufactured in 20 gauge stainless steel in the same square dimensions of the chamber box but with heights of 1”, 3” and 8.5” to accommodate variable heights due to sloped roofing or tapered insulation beneath the roof membrane. This allows the green roof designer more flexibility with plantings around the green roof drain plumbing.

A combination of extensions can be used to closely approximate the media depth and still provide facility managers necessary access to drains for periodic maintenance.

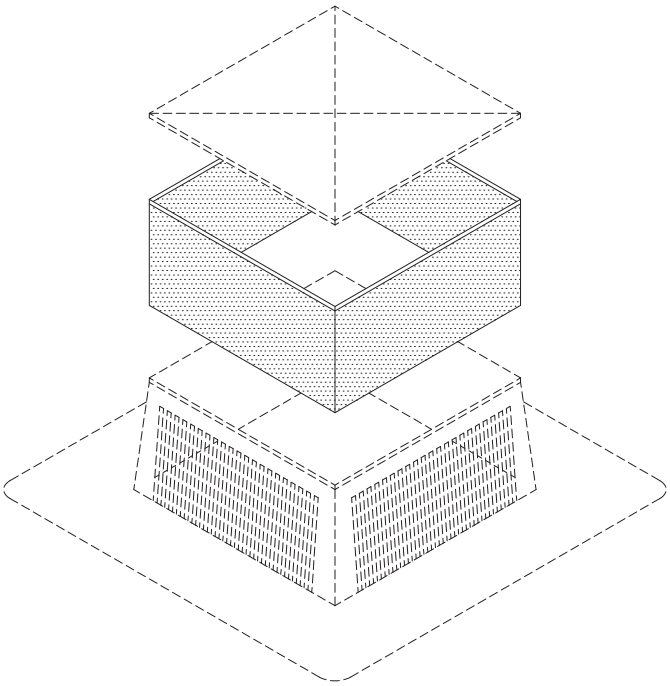

**INSTALLATION:**
Inspection chambers are placed over drains before media or drainage. Typically, they are placed when edge retention is installed. The flange of the drain chamber can be taped in place, if conditions demand.

Option 1: The area around the drain is then either boxed out with edge retention in a plant free perimeter ready to be filled with ballast stone.

Option 2: The drain panels can be cut to the sides of the box of the chamber, lying on the chamber flange. In this case, the drain panel would overlap the flange edge of the chamber. Then system filter is placed up the sides of the chamber box and overlapped into the box, to be held in place by the chamber cover during media placement.

The media can be held back with plywood during construction, if the estimator has left out the extensions. Extensions can be placed later, during planting. Covers for both Inspection Chambers, the 11” and the larger 18” model, will fit over their respective extensions.

| Dimensions | | | | |
|---|---|---|---|---|
| Components | Lid Size | Chamber Size | Flange Size | Extensions |
| Standard Chamber | 11” x 11” x 5/8” | 11” x 11” x 4 3/4” | 17” x 17” | 1”, 3”, and 8 1/2” |
| Large Chamber | 18” x 18” x 5/8” | 18” x 18” x 4 3/4” | 27” x 27” | 1”, 3”, and 8 1/2” |

## WARRANTY

Contact your local SOPREMA representative for project warranty offerings.

310 QUADRAL DRIVE • WADSWORTH, OHIO 44281 • TEL.: (330) 334-0066 • TOLL FREE: (800) 356-3521 • FAX: (330) 334-4289

General product information is provided on this Product Data Sheet. The physical property values reported here are based on testing conducted under controlled laboratory conditions according to accepted test standards.

PRODUCT DATA SHEET

PDS-540
Rev 06/11

# SOPREMA VEGETATIVE MAT

VEGETATIVE MAT

Order No. *

## DESCRIPTION & APPLICATION

Soprema Vegetative Mat is a textile based vegetative mat of light weight fleece sewn to PA/PP entanglements bound to geotextile fabric, filled with a planting substrate, and pre-cultivated with an even layer of low-profile, drought-tolerant vegetation.

The Soprema Vegetative mat is available in light and heavier matting. The selection of the heavier matting will depend on the system design and regional availability.

| PHYSICAL PROPERTIES | |
|---|---|
| PROPERTIES | Vegetative Mat |
| Light-Duty Mat | ± 4.5 lb/ft$^2$ Saturated (without Drainage Substrate and Media) |
| Heavy-Duty Mat | ± 7.0 lb/ft$^2$ Saturated (without Drainage Substrate and Media) |

| SEDUM SPECIES | |
|---|---|
| **USDA ZONE** | **SPECIES** |
| 4-8 | Sedum Album Coral Carpet - On Every Mat |
| 4-9 | Sedum Acre Gold Moss - On Every Mat |
| 3-8 | Sedum Sexangulare - On Every Mat |
| 4-9 | Sedum Reflexum Blue Spruce - On Every Mat |
| 3-9 | Sedum x Immergrunchen - On Selected Mats |
| 3-9 | Sedum Floriferum Weihenstephaner Gold - On Selected Mats |
| 4-9 | Sedum Kamtschaticum - On Selected Mats |
| 3-9 | Sedum Spurium Red Carpet and/or Fludaglut - On Every Mat* |
| | *Light Shade Tolerant |

## WARRANTY

Contact your local SOPREMA representative for project warranty offerings.

310 QUADRAL DRIVE • WADSWORTH, OHIO 44281 • TEL.: (330) 334-0066 • TOLL FREE: (800) 356-3521 • FAX: (330) 334-4289

General product information is provided on this Product Data Sheet. The physical property values reported here are based on testing conducted under controlled laboratory conditions according to accepted test standards.

PRODUCT DATA SHEET

PDS-541
Rev 05/11

# SOPREMA WIND EROSION SYSTEM

EROSION BLANKET — Order No. *
EROSION BLANKET ANCHORS — Order No. *

## DESCRIPTION & APPLICATION

The Soprema Wind Erosion System is designed to control the erosion of a new green roof system until the plantings have grown enough to prevent erosion.

The erosion blanket is made of a naturally biodegradable coconut coir material and will biodegrade in 1 to 2 years, which is enough time for the plant material to establish itself.

The erosion blanket anchor are made of recycled polyethylene or biodegradable cornstarch allowing the anchor to be biodegrade with the blanket. The anchor accepts the included 30-mil steel disk which holds the blanket in place.

Anchors are installed at 3-feet on center increments throughout the field of the installation and 2-feet on center at the edges and corners of the installation.

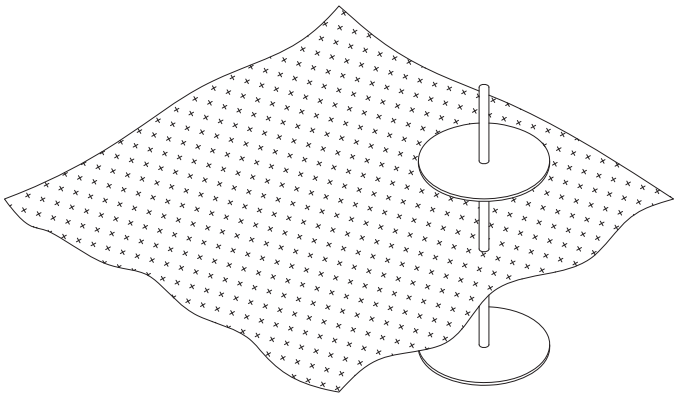

| Descriptions | | | | |
|---|---|---|---|---|
| Components | Material | Thickness | Length | Width |
| Erosion Blanket | Coconut Coir | 10-inch (As a Roll) | 120-feet | 6-feet |
| Metal Disk | Steel | 30-mil | 5-inch | 5-inch |
| Anchor - Base | Recycled Polyethelyene | 1/4-inch | 5-inch | 5-inch |
| Anchor - Shaft | Recycled Polyethelyene | 3/8-inch Diameter | 12-inches | - |
| BioAnchor - Base | Biodegradable Corn Starch | 1/4-inch | 5-inch | 5-inch |
| BioAnchor - Shaft | Biodegradable Corn Starch | 1/4-inch Diameter | 12-inches | - |

## WARRANTY

Contact your local SOPREMA representative for project warranty offerings.

310 QUADRAL DRIVE • WADSWORTH, OHIO 44281 • TEL.: (330) 334-0066 • TOLL FREE: (800) 356-3521 • FAX: (330) 334-4289

General product information is provided on this Product Data Sheet. The physical property values reported here are based on testing conducted under controlled laboratory conditions according to accepted test standards.

PRODUCT DATA SHEET

PDS-542
Rev 06/11

# SOPREMA AGGREDRAIN

AGGREDRAIN

Order No. *

## DESCRIPTION & APPLICATION

Soprema Aggredrain is made of rotary-kiln expandable clay aggregate and/or expandable shale. The Aggredrain closely emulates PH and drainage tendencies of natural soils and complies with ASTM D-0330 and FLL standards.

**Installation:**
The Soprmea Aggredrain should be distributed at a one (1) inch minimum depth over a Soprema supplied protection fabric and covered by a separation fabric.

| Uniformity of Grading (% Passage) | |
|---|---|
| Sieve Size | Average |
| 1/2” | 92% |
| 3/8” | 60% |
| #4 | 14% |
| #8 | 4% |
| **Tested Properties** | |
| Properties | Soprema Aggredrain |
| Specific Gravity (SSD) | 1.35 |
| Dry Unit Weight | 35-38 pcf |
| Saturated Surface Dry Wieght | 46-48 pcf |
| Absorption | 25-30% |

## WARRANTY

Contact your local SOPREMA representative for project warranty offerings.

310 QUADRAL DRIVE • WADSWORTH, OHIO 44281 • TEL.: (330) 334-0066 • TOLL FREE: (800) 356-3521 • FAX: (330) 334-4289

General product information is provided on this Product Data Sheet. The physical property values reported here are based on testing conducted under controlled laboratory conditions according to accepted test standards.

PRODUCT DATA SHEET

PDS-545
Rev 06/11

# SOPREMA FILTER FABRIC

FILTER FABRIC

Order No. *

## DESCRIPTION & APPLICATION

The Soprema Filter Fabric is designed to seperate the growing medium from the drainage system used in vegetative green roof assemblies.

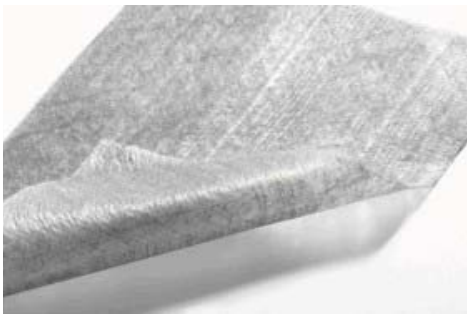

Soprema Filter Fabric is a virgin non-recycled polypropelene, staple fiber, needle-punched and non-woven geotextile. Additionally, the fibers in the fabric are 'needled' to filter fabric for a stable network that retains dimensional stability relative to one one another. The Soprema Filter Fabric offers resistance to UV degredation and to biological and chemical environments typically found in soil.

| AVAILABLE SIZES | | |
|---|---|---|
| **Roll Size** | **Coverage** | **Roll Weight** |
| 6' x 200' | 1200 Sq. Ft. | 35 |
| 6.25' x 360' | 2250 Sq. Ft. | 60 |
| 12.5' x 360 | 4500 Sq. Ft. | 120 |

| PROPERTIES | | |
|---|---|---|
| **Property** | **Soprema Filter Fabric** | **Test Method** |
| Grab Tensile Strength (lbs) | 90 | ASTM D-4623 |
| Elongation @ Break (%) | 50 | ASTM D-4623 |
| Trapezoid Tear Resistance (lbs) | 40 | ASTM D-4533 |
| Puncture Resistance (lbs) | 55 | ASTM D-4833 |
| Mullen Burst (psi) | 185 | ASTM D-3786 |
| UV Stability (% at 500 hrs) | 70 | ASTM D-4355 |
| Permitivity (seconds) | 1.5 | ASTM D-4491 |
| Water Flow Rate (gpm/ft$^2$) | 150 | ASTM D-4491 |
| Permeability (cm/sec) | 0.20 | ASTM D-4491 |
| A.O.S. (US Sieve #) | 70 US | ASTM D-4751 |
| A.O.S. (mm) | 0.212 | ASTM D-4751 |
| Weight (lbs/ft$^2$) | 0.024 | ASTM D-5261 |
| Thickness (inches) | 0.050 | ASTM D-5199 |

## WARRANTY

Contact your local SOPREMA representative for project warranty offerings.

310 QUADRAL DRIVE • WADSWORTH, OHIO 44281 • TEL.: (330) 334-0066 • TOLL FREE: (800) 356-3521 • FAX: (330) 334-4289

General product information is provided on this Product Data Sheet. The physical property values reported here are based on testing conducted under controlled laboratory conditions according to accepted test standards.

PRODUCT DATA SHEET

PDS-546
Rev 06/11

# SOPREMA MOISTURE RETENTION MAT

MOISTURE RETENTION MAT

Order No. *

## DESCRIPTION & APPLICATION

The Soprema Moisture Retention Mat is designed to hold moisture above your waterproofing and root barrier layers and to assist in protecting your waterproofing membrane system. The high retentive qualities of this fabric provides a slow, evaporative release of moisture for green roof plants from deep in the green roof system.

Soprema Filter Fabric is manufactured from 100% recycled materials (35% polypropelene and 65% polyester). Soprema Moisture Retention Matting contains no organic materials and will not decompose. It is available in 3/16-inch or 3/8-inch thicknesses (for maximum moisture retention in precipitation zones of 20-inches or less).

| AVAILABLE SIZES | | | |
|---|---|---|---|
| **Thickness** | **Roll Size** | **Coverage** | **Roll Weight** |
| 3/16” | 6’ x 150’ | 900 Sq. Ft. | 84 lbs |
| 3/8” | 6’ x 75’ | 450 Sq. Ft. | 110 lbs |

| PROPERTIES | | | |
|---|---|---|---|
| **Property** | **3/16-inch** | **3/8-inch** | **Test Method** |
| Thickness (inches) | .187 | .396 | ASTM D-5199 |
| Weight (g/m$^2$) | 325.8 | 960.2 | ASTM D-5261 |
| Breaking Strength, lbs (Warp x Fill) | 186 x 219 | 282 x 435 | ASTM D-4623 |
| Elongation, % (Warp x Fill) | 122 x 96 | 153 x 131 | ASTM D-4623 |
| Bursting Strength (lbs) | 261 | 776 | ASTM D-3786 |
| Puncture Resistance (lbs) | 101 | 275 | ASTM D-4833 |
| Water Retention (gallons/sq. ft.) | .123 | .201 | - |

## WARRANTY

Contact your local SOPREMA representative for project warranty offerings.

310 QUADRAL DRIVE • WADSWORTH, OHIO 44281 • TEL.: (330) 334-0066 • TOLL FREE: (800) 356-3521 • FAX: (330) 334-4289

General product information is provided on this Product Data Sheet. The physical property values reported here are based on testing conducted under controlled laboratory conditions according to accepted test standards.

PRODUCT DATA SHEET

PDS-547
Rev 06/11

# SOPREMA ROOT BARRIER

ROOT BARRIER

Order No. *

## DESCRIPTION & APPLICATION

Soprema Root Barrier is a high tear and puncture resistant virgin-blended linear polyethylene sheet that is designed to protect the waterproofing/roofing assembly from vegetative system's root growth.

The Soprema Root Barrier is coated in Carbon Black to offer a degree of UV protection. The Soprema Root Barrier is flexible enough to conform to a variety of surfaces without tearing or stretching. Double-sided and single-sided butyl tape is available to create a waterproofing seal.

| AVAILABLE SIZES | |
|---|---|
| Root Barrier - 20-mil | 508 Sq. Ft. & 762 Sq. Ft. |
| Root Barrier - 30-mil | 508 Sq. Ft. & 762 Sq. Ft. |

| PROPERTIES | | | |
|---|---|---|---|
| **Soprema Root Barrier** | **20-Mil** | **30-Mil** | **Test Method** |
| Tensile Strength @ Break (lbs) | 75 | 142 | ASTM D-6693 |
| Elongation @ Break (%) | 800 | 800 | ASTM D-6693 |
| Tear Resistance (lbf) | 11 | 16 | ASTM D-1004 |
| Hydrostatic Resistance (psi) | 100 | 170 | ASTM D-751 |
| Puncture Resistance (lbf) | 30 | 45 | ASTM D-4833 |
| Volatile Loss (%) | <1 | <1 | ASTM D-1203 |
| Dimensional Stability (%) | <2 | <2 | ASTM D-1204 |
| Perm Rating (US Perms) | .041 | .031 | ASTM E-96 |

## WARRANTY

Contact your local SOPREMA representative for project warranty offerings.

310 QUADRAL DRIVE • WADSWORTH, OHIO 44281 • TEL.: (330) 334-0066 • TOLL FREE: (800) 356-3521 • FAX: (330) 334-4289

General product information is provided on this Product Data Sheet. The physical property values reported here are based on testing conducted under controlled laboratory conditions according to accepted test standards.

PRODUCT DATA SHEET

PDS-548
Rev 07/11

# SOPREMA EDGE RESTRAINT

EDGE RESTRAINT (4.5" x 4.5" x 96") Order No. E115

## DESCRIPTION & APPLICATION

Soprema Edge Restraint is manufactured specifically for Green Roof construction.

All components are slotted to meet or exceed drainage capacity of all manufactured green roof drainage panels manufactured. Our slot design promotes efficient storm water flow during heavy rainfall.

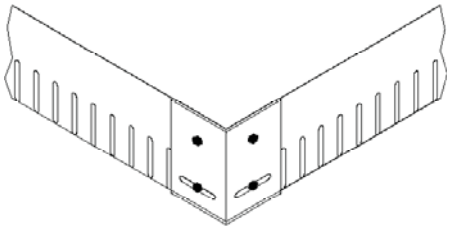

**Slot Specifications:** 12 slots per foot, effective slot mean diameter .375 in, area per slot .11 sq in. Factory flow = 0.0119 CFS/ 5.4 GPM. The design flow is equal to 1.7 GPM per lineal foot (assuming 1" head to match standard or typical drainage course at full volume).

**Available Dimension -** The Soprema Edge Restraint is manufactured with a 4.5-inch verticle slotted edge and a 4.5-inch horizontal support base. It is manufactured at a standard 90˚ edge angle and is available in 96-inch lengths.

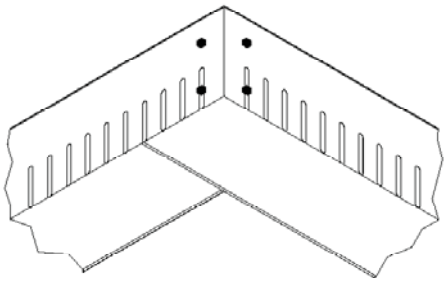

**Materials -** Aluminum, unfinished, .100 thickness 5052 sheet

Corners and connection materials are manufactured in materials matching the required edge restraint. Corners, clips and connections bolts are included.

Available as straight or flexible edging. Flexible edging has V-shaped notches cut into it to allow for shaping to arcs or circles.

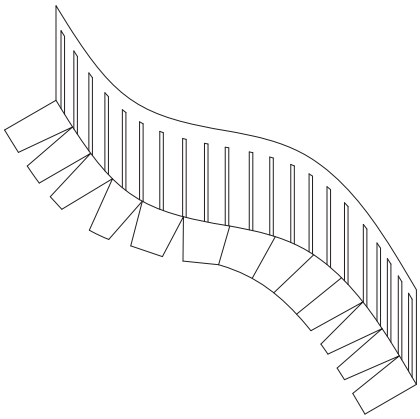

**Colors -** Aluminum edge is offered in powder coating or is anodized to match building trim and flashing. Please consult your local sales representative for availability, details and pricing.

**Installation Instructions:** Edge Restraint is placed on perimeter of planted area and secured with connection accessories. Adhesive approved by roofing membrane manufacturer can be used to secure unconnected lengths or during install on sloped green roof implementations. Roof deck attachments should be flashed in with approved roof membrane flashing by an approved roofing contractor. (Edge restraint and be ordered with perforations for roof decking attachments to eliminate warping of the restraint under pressure) Green Roof edge restraint can be used as paving edging to border unplanted areas providing a clean containment area for vegetation.

See published Specifications and Approved Details.

## WARRANTY

Contact your local SOPREMA representative for project warranty offerings.

310 QUADRAL DRIVE • WADSWORTH, OHIO 44281 • TEL.: (330) 334-0066 • TOLL FREE: (800) 356-3521 • FAX: (330) 334-4289

General product information is provided on this Product Data Sheet. The physical property values reported here are based on testing conducted under controlled laboratory conditions according to accepted test standards.

PRODUCT DATA SHEET

PDS-549
Rev 07/11

# SOPREMA ADHESIVE TAPES

Soprema VaporBond Tape — Order No. *
Soprema Butyl Seal Tape — Order No. *

## DESCRIPTION & APPLICATION

**Soprema VaporBond Tape:**
The Soprema VaporBond Tape is a white, single-sided tape that combines a heavy-duty, weather-resistant polyethylene backing with an aggressive rubber adhesive. The Soprema VaporBond Tape offers excellent seaming capabilities as well as an 'easy tear' feature designed to reduce installation time. Typical applications for this product include vapor retarders, covers and liners.

**Butyl Seal Tape:**
The Soprema Butyl Seal tape is a double-sided reinforced aggressive black butyl rubber tape used to join panels of polyethylene and polypropylene together by overlapping the edges and applying the Butyl Seal tape in between. It is also used to adhere to concrete walls and footings when the substrates are properly prepared. Soprema Butyl Tape is non-hardening and will remain flexible.

| PROPERTIES | | |
|---|---|---|
| | **VaporBond Tape** | **Butyl Seal Tape** |
| Backing | 7.5-mil Polyethylene | Coated Release Paper |
| Adhesive | 1.5-mil Rubber-based Pressure Sensitive | 1mm Black Butyl Rubber |
| Color | White | Black |
| Type | Single Sided | Double Sided |
| Size | 4" x 210' | 2" x 50' |
| Rolls Per Case | 12 | 20 |
| Weight Per Case | 45 lbs. | 55 lbs |
| Adhesion Values | 30 oz/in. (to steel) | 107.5 oz/in. (to steel) |
| Service Temperature | -40° F to 180° F | 30° F to 100° F |
| Minimum Application Temperature | 50° F | 35° F |
| Ideal Storage - Temp. / Humidity % | 70° F / 40-50% | 70° F / 40-50% |

## WARRANTY

Contact your local SOPREMA representative for project warranty offerings.

310 QUADRAL DRIVE • WADSWORTH, OHIO 44281 • TEL.: (330) 334-0066 • TOLL FREE: (800) 356-3521 • FAX: (330) 334-4289

General product information is provided on this Product Data Sheet. The physical property values reported here are based on testing conducted under controlled laboratory conditions according to accepted test standards.

# SOPRADRAIN ECO-VENT

Sopradrain Eco-Vent Order No.*

*Contact Customer Service for Order Number and Availability

## DESCRIPTION

**SOPRADRAIN ECO-VENT** is one of a new generation of environmentally conscious Soprema products. This drainage composite consists of a post-industrial recycled polypropylene drainage core of fused, entangled filaments and a geocomposite fabric bonded to one side. The entangled filaments are molded into a square waffle pattern that maintains the flexible design. This product, because it exceeds 40% post-industrial recycled content, can help contribute up to 2 LEED points when used in conjunction with other recycled content products. **SOPRADRAIN ECO-VENT** can contribute towards additional LEED points when used with a green roof by reducing storm water runoff, heat islands and energy consumption.

Features and Benefits

- Excellent durability
- Protects waterproofing during and after installation of overburden/backfill
- Conforms to irregular surfaces and corners
- Waffle design creates open flow path - even during backfill
- Provides continuous flow even under high loads
- Long rolls reduce installation costs by reducing butt seams and eliminating interlocking
- Recycled content polymer contributes towards LEED points
- Increased flow rates over same thickness nylon and HDPE drains
- 3” fabric overlap flap on both sides

## RECOMMENDED APPLICATIONS

- Foundation walls
- Green roofs
- Plaza decks
- Retaining walls
- Beneath slabs
- Earth sheltered homes
- Underground parking
- Exterior planters

## PACKAGING

| PRODUCT PROPERTIES | ENGLISH UNITS | METRIC UNITS |
|---|---|---|
| Core Width | 39.0 in | 99.1 cm |
| Length | 100.0 ft | 30.5 m |
| Area | 36.0 $yd^2$ | 30.1 $m^2$ |
| Area | 324.0 $ft^2$ | 30.1 $m^2$ |
| Roll Diameter | 27.0 in | 68.6 cm |
| Gross Roll Weight | 57.0 lbs | 25.8 kg |

310 QUADRAL DRIVE • WADSWORTH, OHIO 44281 • TEL.: (330) 334-0066 • TOLL FREE: (800) 356-3521 • FAX: (330) 334-4289

General product information is provided on this Product Data Sheet. The physical property values reported here are based on testing conducted under controlled laboratory conditions according to accepted test standards.

# TECHNICAL DATA

| PHYSICAL PROPERTIES | TEST METHOD | ENGLISH UNITS | METRIC UNITS |
|---|---|---|---|
| **Core Properties** | | | |
| Material | -- | Polypropylene | -- |
| Thickness | -- | 0.45 in | 11.43 mm |
| Core Weight | -- | 16 oz/ $yd^2$ | 542.6 g/ $m^2$ |
| Compressive Stregnth* | ASTM D 1621 | >30,000 psf | 1436 kPa |
| **Fabric Properties** | | | |
| Material | -- | Polypropylene | -- |
| Color | -- | Black | -- |
| Weight | ASTM D 5261 | 4.5 oz/$yd^2$ | 152.6 g/$m^2$ |
| Grab Strength | ASTM D 4632 | 120.0 lbs | 0.54 kN |
| Grab Elongation | ASTM D 4632 | 50% | 50% |
| Trapeziodal Tear | ASTM D 4533 | 50.0 lbs | 0.22 kN |
| Puncture Strength | ASTM D 4833 | 70.0 lbs | 0.31 kN |
| Apparent Opening Size | ASTM D 4751 | 70 US Sieve | 0.212 mm |
| Flow Rate | ASTM D 4491 | 120.0 gal/min/$ft^2$ | 4887 l/sec/$m^2$ |
| Permittivity | ASTM D 4491 | 1.8 $sec^{-1}$ | 1.8 $sec^{-1}$ |

(All values are nominal)
*Tested per ASTM D 1621 modified and ASTM D 4716.
*Failure defined as reaching yield point or no continued measurable flow under stated load.

| FLOW RATES | | | |
|---|---|---|---|
| **Pressure** | **1.0 Gradient** | **0.5 Gradient** | **0.2 Gradient** |
| 250 psf | 22.5 gal/min/ft | 15.5 gal/min/ft | 9.2 gal/min/ft |
| 500 psf | 22.0 gal/min/ft | 15.2 gal/min/ft | 8.7 gal/min/ft |
| 1000 psf | 20.7 gal/min/ft | 14.3 gal/min/ft | 8.4 gal/min/ft |
| 2000 psf | 19.0 gal/min/ft | 13.1 gal/min/ft | 8.3 gal/min/ft |
| 3000 psf | 16.0 gal/min/ft | 11.0 gal/min/ft | 6.4 gal/min/ft |
| 3600 psf | 13.0 gal/min/ft | 8.7 gal/min/ft | 5.4 gal/min/ft |
| 5000 psf | 8.05 gal/min/ft | 5.4 gal/min/ft | 3.1 gal/min/ft |
| 8000 psf | 3.2 gal/min/ft | 2.0 gal/min/ft | 1.1 gal/min/ft |

Typical flow vs. pressure for vertical applications (ASTM D 4716) Sample configuration: Plate/SOPRADRAIN ECO-VENT/ Plate (Values are average of machine direction and cross machine direction test results.)



General product information is provided on this Product Data Sheet. The physical property values reported here are based on testing conducted under controlled laboratory conditions according to accepted test standards.

PRODUCT DATA SHEET

PDS-574
Rev 11/10

# SOPRADRAIN ECO-2

Sopradrain ECO-2 Order No. *

*Contact Customer Service for Order Number and Availability

## DESCRIPTION

Sopradrain ECO-2 is one of a new generation of environmentally conscious Soprema products. This drainage composite consists of a post-industrial recycled polypropylene drainage core of fused, entangled filaments and a geocomposite fabric bonded to one side. The entangled filaments are molded into a square waffle pattern that maintains the flexible design of other Soprema products. This product, because it exceeds 40% post-industrial recycled content, can help contribute up to 2 LEED points when used in conjunction with other recycled content products. Sopradrain ECO-2 can contribute towards additional LEED points when used with a green roof by reducing storm water runoff, heat islands and energy consumption. The second fabric eliminates the need for protection board and provides additional protection for the waterproofing membrane.

Features and Benefits

- Excellent durability
- Protects waterproofing during and after backfill
- Second fabric eliminates need for protection board
- Conforms to irregular surfaces and corners
- Waffle design creates open flow path - even during backfill
- Provides continuous flow even under high loads
- Long rolls reduce installation costs by reducing butt seams and eliminating interlocking
- Recycled content polymer contributes towards LEED points
- Increased flow rates over same thickness nylon and HDPE drains
- 3” fabric overlap flap on both sides

## RECOMMENDED APPLICATIONS

- Foundation walls
- Green roofs
- Plaza decks
- Retaining walls
- Beneath slabs
- Earth sheltered homes
- Underground parking
- Exterior planters

## PACKAGING

| PRODUCT PROPERTIES | ENGLISH UNITS | METRIC UNITS |
|---|---|---|
| Core Width | 39.0 in | 99.1 cm |
| Length | 100.0 ft | 30.5 m |
| Area | 36.0 $yd^2$ | 30.1 $m^2$ |
| Area | 324.0 $ft^2$ | 30.1 $m^2$ |
| Roll Diameter | 27.0 in | 68.6 cm |
| Gross Roll Weight | 64.2 lbs | 29.1 kg |

310 QUADRAL DRIVE • WADSWORTH, OHIO 44281 • TEL.: (330) 334-0066 • TOLL FREE: (800) 356-3521 • FAX: (330) 334-4289

General product information is provided on this Product Data Sheet. The physical property values reported here are based on testing conducted under controlled laboratory conditions according to accepted test standards.

# TECHNICAL DATA

| PHYSICAL PROPERTIES | TEST METHOD | ENGLISH UNITS | METRIC UNITS |
|---|---|---|---|
| **Core Properties** | | | |
| Material | -- | Polypropylene | -- |
| Thickness | -- | 0.45 in | 11.43 mm |
| Core Weight | -- | 16 oz/ $yd^2$ | 542.6 g/ $m^2$ |
| Compressive Stregnth* | ASTM D 1621 | >30,000 psf | 1436 kPa |
| **Fabric Properties** | | | |
| Material | -- | Polypropylene | -- |
| Color | -- | Black | -- |
| Weight | ASTM D 5261 | 4.5 oz/$yd^2$ | 152.6 g/$m^2$ |
| Grab Strength | ASTM D 4632 | 120.0 lbs | 0.54 kN |
| Grab Elongation | ASTM D 4632 | 50% | 50% |
| Trapeziodal Tear | ASTM D 4533 | 50.0 lbs | 0.22 kN |
| Puncture Strength | ASTM D 4833 | 70.0 lbs | 0.31 kN |
| Apparent Opening Size | ASTM D 4751 | 70 US Sieve | 0.212 mm |
| Flow Rate | ASTM D 4491 | 120.0 gal/min/$ft^2$ | 4887 l/sec/$m^2$ |
| Permittivity | ASTM D 4491 | 1.8 $sec^{-1}$ | 1.8 $sec^{-1}$ |

(All values are nominal)
*Tested per ASTM D 1621 modified and ASTM D 4716.
*Failure defined as reaching yield point or no continued measurable flow under stated load.

| FLOW RATES | | | |
|---|---|---|---|
| **Pressure** | **1.0 Gradient** | **0.5 Gradient** | **0.2 Gradient** |
| 250 psf | 20.2 gal/min/ft | 13.6 gal/min/ft | 7.7 gal/min/ft |
| 500 psf | 18.1 gal/min/ft | 12.4 gal/min/ft | 7.3 gal/min/ft |
| 1000 psf | 17.9 gal/min/ft | 12.2 gal/min/ft | 7.2 gal/min/ft |
| 2000 psf | 16.8 gal/min/ft | 11.2 gal/min/ft | 7.0 gal/min/ft |
| 3000 psf | 12.9 gal/min/ft | 7.9 gal/min/ft | 4.9 gal/min/ft |
| 3600 psf | 8.6 gal/min/ft | 4.7 gal/min/ft | 2.8 gal/min/ft |
| 5000 psf | 3.8 gal/min/ft | 2.5 gal/min/ft | 1.3 gal/min/ft |
| 8000 psf | 1.7 gal/min/ft | 1.0 gal/min/ft | 0.5 gal/min/ft |

Typical flow vs. pressure for vertical applications (ASTM D 4716) Sample configuration: Plate/SOPRADRAIN ECO-2/Plate
(Values are average of machine direction and cross machine direction test results.)



General product information is provided on this Product Data Sheet. The physical property values reported here are based on testing conducted under controlled laboratory conditions according to accepted test standards.

PRODUCT DATA SHEET

PDS-577
Rev 11/10

# SOPRADRAIN ECO-VENT WR

Sopradrain Eco-Vent WR Order No.*

*Contact Customer Service for Order Number and Availability

## DESCRIPTION

**SOPRADRAIN ECO-VENT WR** is one of a new generation of environmentally conscious Soprema products specifically designed for **SOPRANATURE** garden roofs. This muti-function composite consists of a 50% post-industrial recycled polypropylene drainage core of fused, entangled filaments and a specially formulated water retention fabric bonded to one side. The composite water retention fabric consists of a 8 oz/yd$^2$- 100% post consumer recycled non-woven polyester fabric mechanically bonded to a 12 oz/yd$^2$ layer of synthetic hydrophilic (water) absorbent matte. The absorbent matte is designed to hold 10 to 12 times its unit weight of water. It is a very strong, durable composite that is extremely resistant to puncture and tearing. The composite is inert to biological degradation and naturally encountered chemicals, alkalis and acids. This product can help contribute up to 2 LEED points when used in conjunction with other recycled content products. As part of a **SOPRANATURE** garden roof, **SOPRADRAIN ECO-VENT WR** can contribute towards additional LEED points by reducing storm water runoff, heat islands and energy consumption.

Features and Benefits

- Excellent durability
- Protects waterproofing during and after installation of growing media
- Conforms to irregular surfaces and corners
- Waffle design creates open flow path - even during installation of growing media
- Long rolls reduce installation costs by reducing butt seams and eliminating interlocking
- Recycled content polymer in core and fabric contributes towards LEED points
- Provides superior water holding capacity
- Reduces runoff volume in garden roof applications
- 3” fabric overlap flap

## RECOMMENDED APPLICATIONS

- SOPRANATURE garden roof systems (Extensive, Semi-intensive or Intensive)
- Exterior planters
- Interior planters

## PACKAGING

| PRODUCT PROPERTIES | ENGLISH UNITS | METRIC UNITS |
|---|---|---|
| Core Width | 39.0 in | 99.1 cm |
| Length | 61.5 ft | 18.6 m |
| Area | 22.2 yd$^2$ | 18.6 m$^2$ |
| Area | 200 ft$^2$ | 18.6 m$^2$ |
| Roll Diameter | 27.0 in | 68.6 cm |
| Gross Roll Weight | 58.0 lbs | 26.4 kg |

310 QUADRAL DRIVE • WADSWORTH, OHIO 44281 • TEL.: (330) 334-0066 • TOLL FREE: (800) 356-3521 • FAX: (330) 334-4289

General product information is provided on this Product Data Sheet. The physical property values reported here are based on testing conducted under controlled laboratory conditions according to accepted test standards.

# TECHNICAL DATA

| PHYSICAL PROPERTIES | TEST METHOD | TYPICAL VALUE |
|---|---|---|
| **Core Properties** | | |
| Material | -- | Recycled Polypropylene |
| Thickness | -- | 0.60 in |
| Core Weight | -- | 16 oz/ $yd^2$ |
| Flow Rate* | ASTM D 4716 | 6.9 gal/min/ft |
| Compressive Stregnth*[1] | ASTM D 1621 | >30,000 psf |
| **Fabric Properties** | | |
| Material | -- | Polypropylene / Recycled Polyester |
| Color | -- | Light Green |
| Weight | ASTM D 5261 | 20.0 oz/$yd^2$ |
| Grab Strength | ASTM D 4632 | 135.0 lbs |
| Grab Elongation | ASTM D 4632 | 70% |
| Puncture Strength | ASTM D 4833 | 70.0 lbs |
| Mullen Burst Strength | ASTM D 3786 | 300 psig |
| Flow Rate | ASTM D 4491 | 120.0 gal/min/$ft^2$ |
| Permittivity | ASTM D 4491 | 1.8 $sec^{-1}$ |

(All values are nominal)
*Tested at Gradient of 0.1 (23.0 gal/min/ft when tested at Gradient of 1.0)
*[1] Tested per ASTM D 1621 modified and ASTM D 4716. Failure defined as reaching yield point or no continued measurable flow under stated load.

| Polymer Properties |
|---|
| Polypropylene has excellent resistance to organic solvents, degreasing agents, acids and alkalines. It provides superior tensile tensile strength to that of high density polyethylene. It has a low moisture absorption rate, is resistant to staining and is extremely lightweight. |


General product information is provided on this Product Data Sheet. The physical property values reported here are based on testing conducted under controlled laboratory conditions according to accepted test standards.

PRODUCT DATA SHEET

PDS-578
Rev 11/10

# SOPRADRAIN ECO-2 WR

Sopradrain Eco-2 WR

Order No.*

*Contact Customer Service for Order Number and Availability

## DESCRIPTION

**SOPRADRAIN ECO-2 WR** is one of a new generation of environmentally conscious Soprema products specifically designed for **SOPRANATURE** garden roofs. This muti-function composite consists of a 50% post-industrial recycled polypropylene drainage core of fused, entangled filaments, a protective geotextlie fabric on the underside and a specially formulated water retention fabric bonded to the top side. The composite water retention fabric consists of a 8 oz/yd$^2$- 100% post consumer recycled non-woven polyester fabric mechanically bonded to a 12 oz/yd$^2$ layer of synthetic hydrophilic (water) absorbent matte. The absorbent matte is designed to hold 10 to 12 times its unit weight of water. It is a very strong, durable composite that is extremely resistant to puncture and tearing. The composite is inert to biological degradation and naturally encountered chemicals, alkalis and acids. This product can help contribute up to 2 LEED points when used in conjunction with other recycled content products. As part of a **SOPRANATURE** garden roof, **SOPRADRAIN ECO-2 WR** can contribute towards additional LEED points by reducing storm water runoff, heat islands and energy consumption.

Features and Benefits

- Excellent durability
- Protects waterproofing during and after installation of growing media
- Conforms to irregular surfaces and corners
- Waffle design creates open flow path - even during installation of growing media
- Long rolls reduce installation costs by reducing butt seams and eliminating interlocking
- Recycled content polymer in core and fabric contributes towards LEED points
- Provides superior water holding capacity
- Reduces runoff volume in garden roof applications
- 3” fabric overlap flap

## RECOMMENDED APPLICATIONS

- SOPRANATURE garden roof systems (Extensive, Semi-intensive or Intensive)
- Exterior planters
- Interior planters

## PACKAGING

| PRODUCT PROPERTIES | ENGLISH UNITS | METRIC UNITS |
|---|---|---|
| Core Width | 39.0 in | 99.1 cm |
| Length | 61.5 ft | 18.6 m |
| Area | 22.2 yd$^2$ | 18.6 m$^2$ |
| Area | 200 ft$^2$ | 18.6 m$^2$ |
| Roll Diameter | 27.0 in | 68.6 cm |
| Gross Roll Weight | 58.0 lbs | 26.4 kg |

310 QUADRAL DRIVE • WADSWORTH, OHIO 44281 • TEL.: (330) 334-0066 • TOLL FREE: (800) 356-3521 • FAX: (330) 334-4289

General product information is provided on this Product Data Sheet. The physical property values reported here are based on testing conducted under controlled laboratory conditions according to accepted test standards.

# TECHNICAL DATA

| PHYSICAL PROPERTIES | TEST METHOD | TYPICAL VALUE |
|---|---|---|
| **Core Properties** | | |
| Material | -- | Recycled Polypropylene |
| Thickness | -- | 0.60 in |
| Core Weight | -- | 16 oz/ $yd^2$ |
| Flow Rate* | ASTM D 4716 | 6.9 gal/min/ft |
| Compressive Stregnth*[1] | ASTM D 1621 | >30,000 psf |
| **Fabric Properties** | | |
| Material | -- | Polypropylene / Recycled Polyester |
| Color | -- | Light Green |
| Weight | ASTM D 5261 | 20.0 oz/$yd^2$ |
| Grab Strength | ASTM D 4632 | 135.0 lbs |
| Grab Elongation | ASTM D 4632 | 70% |
| Puncture Strength | ASTM D 4833 | 70.0 lbs |
| Mullen Burst Strength | ASTM D 3786 | 300 psig |
| Flow Rate | ASTM D 4491 | 120.0 gal/min/$ft^2$ |
| Permittivity | ASTM D 4491 | 1.8 $sec^{-1}$ |

(All values are nominal)
*Tested at Gradient of 0.1 (23.0 gal/min/ft when tested at Gradient of 1.0)
*[1] Tested per ASTM D 1621 modified and ASTM D 4716. Failure defined as reaching yield point or no continued measurable flow under stated load.

| Polymer Properties |
|---|
| Polypropylene has excellent resistance to organic solvents, degreasing agents, acids and alkalines. It provides superior tensile tensile strength to that of high density polyethylene. It has a low moisture absorption rate, is resistant to staining and is extremely lightweight. |


General product information is provided on this Product Data Sheet. The physical property values reported here are based on testing conducted under controlled laboratory conditions according to accepted test standards.

PRODUCT DATA SHEET

PDS-580
Rev 02/09

# MICROFAB

ROOT BARRIER

Order No. *

***Contact Customer Service for order number and availability.**

## DESCRIPTION

MICROFAB is a coated, woven and micro-perforated polyethylene fabric that is used as a root barrier for applications in planters and on SOPRANATURE roof gardens.

MICROFAB is used as a root barrier above any approved SOPRADRAIN (drainboard), SOPRADRAIN WR (water-retention mat) or to complete the root protection when using AQUAMAT JARDIN, at borders, edges and details.

## FEATURES & BENEFITS

- Physical root barrier, prevents any type of chemical from leaching to roof drains
- Conforms to irregular surfaces and changes in plane
- Perforations in the fabric allow the flow of air and water but do not allow the penetration of plant roots

## PACKAGING

MICROFAB is packaged in rolls of 300 feet (91.5 m) in length by 11 feet (3.35 m) and 3 feet (.914 m) in width. The weight per roll is 105 pounds (47.6 kg) for 11 feet wide roll and 30 pounds (13.6 kg) for the 3 feet wide roll.

## PHYSICAL PROPERTIES

| PROPERTY | TEST METHOD | TEST VALUE |
|---|---|---|
| Thickness (mils) | -- | 18 (0.46 mm) |
| Tensile Strength (lbf) | ASTM D 4632 | 45 (200 N) |
| Elongation at break % | ASTM D 4632 | 15 |
| Tear Strength (lbf) | ASTM D 4533 | 6.7 (30 N) |
| Mullen Burst Strength (psi) | ASTM D 3786 | 70 (485 kPa) |
| Permeability (cm/s) | ASTM D 4491 | 1.5 x 10 |

310 QUADRAL DRIVE • WADSWORTH, OHIO 44281 • TEL.: (330) 334-0066 • TOLL FREE: (800) 356-3521 • FAX: (330) 334-4289

General product information is provided on this Product Data Sheet. The physical property values reported here are based on testing conducted under controlled laboratory conditions according to accepted test standards.

PRODUCT DATA SHEET

PDS-581
Rev 04/10

# AQUAMAT JARDIN

AQUAMAT JARDIN Order No. E401*

***Above order number is for 11' x 100' roll. Order number for 7' x 100' roll is E402.**

## DESCRIPTION

AQUAMAT JARDIN is a capillary mat specially designed for green roof irrigation and water retention in green roof assemblies. AQUAMAT JARDIN is a lamination of four materials that perform specifiec functions as follows:

- The top surface root barrier prevents roof penetration and permits the passage of water into the growing medium through capillary absorption.
- The integrated irrigation system provides watering with lines spaced at two (2') feet (60 cm).
- The non-woven geotextile acts as a reservoir that retains and distributes moisture constantly and evenly throughout the entire area.
- The bottom layer is a watertight 6 mil black, UV treated polyethylene film, which forms a capillary break at every ten (10) feet (3.05 m).

## FEATURES & BENEFITS

- Provides an easy water capillary rise on a thickness of eight (8") inches of growing medium on slopes up to 3%.
- Uses less than 60% of the water required by conventional overhead irrigation.
- Supplies water to the plants constantly and equally resulting in accelerated growth and stronger roof systems. Also reduces plant water stress.
- Lightweight at only 0.15 pounds per square foot (750 g/m$^2$).
- Very effective water retention capacity of 2.5 gal/yd$^2$ (11.6 l/m$^2$).

## PHYSICAL PROPERTIES

| PROPERTY | TEST METHOD | TEST VALUE | |
|---|---|---|---|
| Roll Dimensions (feet) | NA | 11 x 100 (3.35 x 30.5 m) | 7 x 100 (2.13 x 30.5 m) |
| Roll Surface (ft$^2$) | NA | 1100 (102 m$^2$) | 700 (65 m$^2$) |
| Roll Weight (lbs.) | NA | 170 (77 kg) | 108 (49 kg) |
| Thickness (mils) | ASTM D 5199 | 4 (6.3 mm) | |
| Capillary rise (inches) | SAGEOS GX 009-02 | 5 (125 mm) | |
| Water retention capacity (gal/yd$^2$) | SAGEOS GX 009-02 | 2.5 gal (11.6 l/m$^2$) | |
| Transmissivity (in/min) | SAGEOS GX 009-02 | 4.14 (10.5 cm/min) | |
| All values are nominal | | | |

310 QUADRAL DRIVE • WADSWORTH, OHIO 44281 • TEL.: (330) 334-0066 • TOLL FREE: (800) 356-3521 • FAX: (330) 334-4289

General product information is provided on this Product Data Sheet. The physical property values reported here are based on testing conducted under controlled laboratory conditions according to accepted test standards.